Title ~~410~~ 411- NEBRASKA DEPARTMENT OF ROADS - ~~RIGHT OF WAY~~ TRAFFIC ENGINEERING DIVISION

Chapter ~~3~~ 5 - ~~Sign Permits (Continued)~~ Tourist-Oriented Directional Sign (TODS) Panels

~~004 RULES AND REGULATIONS RELATING TO THE ERECTION AND MAINTENANCE OF TOURIST ORIENTED DIRECTIONAL SIGN PANELS (TODS) WITHIN THE RIGHT OF WAY OF RURAL CONVENTIONAL ROADS IN THE STATE OF NEBRASKA.~~ 001 GENERAL. These Rules and Regulations are set forth to adopt the requirements of Sections 39-207 through 39-211, Neb.Rev.Stat. and the federal requirements governing the erection and maintenance of Tourist-Oriented Directional Sign (TODS) panels within the right-of-way of Rural Conventional Roads in the State of Nebraska. The requirements set forth by the Federal Highway Administration when authorizing the installation of Tourist-Oriented Directional Sign (TODS) panels within the public right of way are to provide travelers with the business identification and directional information for businesses (including seasonal agricultural products), services and activities, the major portion of whose income or visitors are derived during the normal business season from motorists not residing in the immediate area of the business or activity. They are to provide a service to the traveling public and not to provide an advertising medium for businesses. They are intended for use only on Rural Conventional Roads and shall not be used on freeways and interchanges on expressways. All references to Nebraska Revised Statutes refer to the most recently published Reissue or Supplement.

~~004.01~~ 002 DEFINITIONS: For the purpose of these Rules and Regulations the following definitions are provided:

~~004.01A~~ 002.01 "Activity Plaque" shall mean a sign that displays the identification of a specific qualified activity or business, the distance to the activity, and the directional arrow, and forms a part of a Tourist-Oriented Directional Sign (TODS) panel.

~~004.01B~~ 002.02 "Agent" shall mean a person, corporation, or business that enters into a contract with the Department of Roads for the purpose of operating the Tourist-Oriented Directional Signing (TODS) Program.

~~004.01C~~ 002.03 "Annual Fee" shall mean the fair market rental value of the sign site and any cost associated with the fabrication, erection, maintenance or servicing of Tourist-Oriented Directional Signs, such costs or criteria therefore being established by contract.

~~004.01D~~ 002.04 "Conforming Advertising Devices" shall mean those devices that have been lawfully erected, as described under Neb.Rev.Stat. 39-1320.02 through 39-1320.15 and the Rules and Regulations Title 410, Chapter 3, Section 002.

~~004.01E~~ 002.05 "Department" shall mean the State of Nebraska Department of Roads.

~~004.01F~~ 002.06 "Directional Advertising Device" shall include, but is not limited to: advertising devices containing directional information about public places owned or operated by federal, state or local governments or their agencies, publicly or privately owned natural phenomena, historic, cultural, scientific, educational, and religious sites; and areas of natural scenic beauty or naturally suited for outdoor recreation, deemed to be in the interest of the traveling public. Such devices shall conform to standards promulgated by the Department pursuant to Neb.Rev.Stat. 39-1320.06, which standards shall conform to the national policy.

~~004.01G~~ 002.07 "District Office" shall mean the headquarters for any one of the eight geographical subdivisions of the Nebraska Department of Roads.

~~004.01H~~ 002.08 "Erect" shall mean construct or allow to be constructed.

~~004.01I~~ 002.09 "Expressway" shall mean a divided arterial highway for through traffic with full or partial control of access which may have grade separations at intersections.

~~004.01J~~ 002.10 "FHWA" shall mean the Federal Highway Administration, the U.S. Department of Transportation.

~~004.01K~~ 002.11 "Federal Authority" refers to 23 USC 109(d), 315, and 402(a); 49 CFR 1.48(b); and federal requirements.

~~004.01L~~ 002.12 "Gore" shall mean the area immediately beyond the divergence of two traveled ways, bounded by the edges of those traveled ways.

~~004.01M~~ 002.13 "Freeway" shall mean a divided arterial highway designed primarily for through traffic with full control of access and with grade separations at all intersecting road crossings, including all interchanges and approach and exit roads thereto.

~~004.01N~~ 002.14 "Highway" shall mean the entire width between the boundary limits of any street, road, avenue, boulevard, or way which is publicly maintained when any part thereof is open to the use of the public for purposes of vehicular travel.

~~004.01O~~ 002.15 "Highway Miles" shall mean the distance in miles calculated by traveling on any highway, as opposed to air miles.

~~004.01P~~ 002.16 "Illegal Sign" shall mean a device erected that does not comply with the requirements of Neb.Rev.Stat. 39-1320.02 through 39-1320.15 and the Rules and Regulations Title 410, Chapter 3, Section 002.

~~004.01Q~~ 002.17 "Immediate Area" shall mean within a 40-mile radius (air miles) as determined by the post office address of the visitor.

~~004.01R~~ 002.18 "Interchange" shall mean a grade-separated intersection with one or more turning roadways for travel between any of the highways radiating from and forming part of such intersection.

~~004.01S~~ 002.19 "Intersection" shall mean the area embraced within the prolongation or connection of the lateral curb lines or, if there are not lateral curb lines, the lateral boundary lines of the roadways of two or more highways which join one another at, or approximately at, right angles or the area within which vehicles

traveling upon different highways joining at any other angle may come in conflict. When a highway includes two roadways thirty feet or more apart, then every crossing of each roadway of such divided highway by an intersecting highway shall be regarded as a separate intersection. In the event such intersecting highway also includes two roadways thirty feet or more apart, then every crossing of two roadways of such highways shall be regarded as a separate intersection. The junction of an alley with a highway shall not constitute an intersection.

~~004.01T~~ 002.20 "Interstate Highway System" shall mean any highway included as a part of the Dwight D. Eisenhower National System of Interstate and Defense Highways established by the Federal Aid Highway Act of 1956, and defined in Title 23 of the United States Code and any other subsequent acts of Congress.

~~004.01U~~ 002.21 "Local Authority" shall mean every county, municipal, and other local board or body having power to enact laws, rules or regulations relating to traffic under the Constitution of Nebraska and the laws of the state and generally including the directors of state institutions, the Nebraska Game and Parks Commission, and all natural resources districts with regard to roads not a part of the state highway system and within the limits of such institution, of an area under Nebraska Game and Parks Commission control, or of an area owned or leased by a natural resources district, but outside the limits of any incorporated city or village.

~~004.01V~~ 002.22 "MUTCD" refers to the Manual on Uniform Traffic Control Devices and the Nebraska Supplement thereto, adopted in Title 411, Chapter 1, Section 001.01, adopted pursuant to Section 60-6,118 Neb.Rev.Stat.

~~004.01W~~ 002.23 "Maintenance" shall mean to preserve, keep in repair, continue or replace a TODS Panel/Activity plaque.

~~004.01X~~ 002.24 "Major Portion of Income or Visitors" shall mean a percentage of the annual income derived from the activity or visitors to the activity during the normal season of the activity. Sales from the use of catalogs, brochures, etc., which do not result in the purchasers presence at the business or activity site shall be excluded from the computation of what constitutes a major portion of income or visitors.

~~004.01X1~~ 002.24A Major portion of income or visitors shall be subdivided as follows:

~~004.01X1a~~ 002.24A1 Businesses Open Seasonally: 50% of the annual income or visitors to the activity.

~~004.01X1b~~ 002.24A2 Businesses Open All Year-Around: 30% of the annual income or visitors to the activity.

~~004.01Y~~ 002.25 "Municipality" shall mean a political entity of the State of Nebraska having corporate status and engaged in exercising some of the functions of government in a limited locality.

~~004.01Z~~ 002.26 "Neb.Rev.Stat." shall mean Nebraska Revised Statutes, as amended.

~~004.01AA~~ 002.27 "Nonconforming Advertising Device" shall mean a sign which was lawfully erected, but which does not now comply with the provisions of the State Law or State Rules and Regulations.

~~004.01BB~~ 002.28 "Normal Season and Normal Business Season" shall mean the period of the year the activity, business, or service is continuously open to the public.

~~004.01CC~~ 002.29 "Official Traffic Control Device" shall mean all signs, signals, markings, and devices placed or displayed by authority of public body or official having jurisdiction, for the purpose of regulating, warning, or guiding traffic.

~~004.01DD~~ 002.30 "Owner" shall mean the holder of title or the holder of a leasehold estate or other interests from the owner of real property.

~~004.01EE~~ 002.31 "Qualified Tourist-Oriented Activity" shall mean businesses, services and activities the major portion of whose income or visitors are derived during the normal business season from motorists not residing in the immediate area of the activity and meeting the criteria established by these Rules and Regulations.

~~004.01FF~~ 002.32 "Responsible Operator" shall mean a person or Agent other than an owner who operates a qualified activity and who has authority to enter into agreements relevant to matters covered by these Rules and Regulations.

~~004.01GG~~ 002.33 "Retroreflective" shall mean when light rays strike a surface and are redirected directly back to its source. It is the most commonly used means of making signs visible to the driver at night.

~~004.01HH~~ 002.34 "Roadway" shall mean that portion of a highway improved, designed, or ordinarily used for vehicular travel, exclusive of the berm or shoulder. In the event the highway includes two or more separate roadways, "roadway" refers to any such roadway separately but not to all such roadways collectively.

~~004.01II~~ 002.35 "Route" shall mean particular roads which collectively assist motorists in reaching their destination(s).

~~004.01JJ~~ 002.36 "Rural and Rural Area" shall mean an area outside the limits of any municipality.

~~004.01KK~~ 002.37 "Rural Conventional Road" shall mean all highways and streets which comprise the designated state highway system, further described as 1) all highways or streets outside the limits of any municipality, exclusive of freeways and interchanges on expressways, and 2) all highways or streets within municipalities having a population of forty thousand people or less, exclusive of freeways and interchanges on expressways.

~~004.01LL~~ 002.38 "Seasonal Closure" shall mean when an activity is not open to the public for more than 14 continuous days.

~~004.01MM~~ 002.39 "Seasonal Plaque" shall mean a plaque that must be removed or covered during certain portions of the calendar year based upon seasonal closures of the activity.

~~004.01NN~~ 002.40 "State Signing Standards" shall mean those drawing and specifications published, and adopted for use by the Department.

~~004.01OO~~ 002.41 "Symbol" shall mean the standard designs used in preference to word messages and are as shown in the MUTCD and Standard Highway Signs booklet, published by the U.S. Department of Transportation.

~~004.01PP~~ 002.42 "Tourist" shall mean motorists not residing in the immediate area of the activity.

~~004.01QQ~~ 002.43 "Tourist-Oriented Directional Sign (TODS) Panels ~~(TODS)~~" shall mean a traffic control device located within the right-of-way of Rural Conventional Roads bearing separately affixed Activity plaques (not to exceed four) which provides specific directional information to qualified activities.

~~004.01RR~~ 002.44 "Trailblazers" shall mean supplemental guidance signs providing directional information from the Rural Conventional Road to a particular activity.

~~004.01SS~~ 002.45 "Urban Area" shall mean the area inside the limits of any municipality.

~~004.01TT~~ 002.46 "Visible" as used in Neb.Rev.Stat. 39-1320.06, 39-1320.07 and 39-1320.09 in reference to advertising signs, displays, or devices, shall mean the message or advertising content of such sign, display, or device is capable of being seen without visual aid by a person of normal visual acuity. A sign shall be considered visible even though the message or advertising content may be seen but not read.

~~004.02~~ 003 ELIGIBILITY REQUIREMENTS

~~004.02A~~ 003.01 The eligibility requirements are applicable to all ~~Tourist-Oriented Directional Sign~~ TODS panels ~~(TODS)~~ and Trailblazers erected.

~~004.02B~~ 003.02 The tourist-oriented activity, before qualifying to appear on a TODS panel, shall provide the Department or Agent with a written assurance of its conformity with all Federal and State laws relating to discrimination based on race, creed, color, sex, national origin, ancestry, political affiliation, religion and its conformity with the Americans with Disabilities Act (ADA). If the activity violates any of such laws, it shall lose its eligibility to appear on a TODS panel.

~~004.02C~~ 003.03 Any activity that has erected an advertising sign that does not comply with the requirements of Neb.Rev.Stat. 39-1302.2 through 39-1320.15 and the Rules and Regulations Title 410, Chapter 3, Section 002 shall not be eligible to be identified on any of the ~~tourist-oriented directional sign~~ TODS panels until all illegal signs are removed or brought into conformity with the law.

~~004.02D~~ 003.04 The activity also shall not have an official traffic control device which directs motorists to its business.

~~004.02E~~ 003.05 Tourist-oriented directional activity plaques shall include, but not be limited to, signs giving directions to recreational, historical, cultural, educational, or entertainment activities. In addition, unique or unusual commercial or nonprofit activities will also qualify. Each activity shall meet all the eligibility requirements.

~~004.02F~~ 003.06 The activity, service or business (including seasonal agricultural products) must derive the major portion of their income or visitors during the normal business season from motorists not residing in the immediate area of the business or activity. A one-year initial grace period will be allowed for those activities without sufficient records to support the requirements of ~~004.01X~~ 002.24.

~~004.02G~~ 003.07 The activity, service or business must have obtained all required approvals or licenses from the State or local agencies having jurisdiction, including permits or ordinances for the erection of Trailblazer signs, when necessary.

~~004.02H~~ 003.08 The activity must be open to the public during the normal season of the activity at least eight hours per day, five days per week. The business week must include a Saturday or a Sunday.

~~004.02I~~ 003.09 The activity shall be conducted in an appropriate building or area. It shall not be conducted in a building principally used as a residence unless there is a convenient and well-marked entrance, except that a “Bed and Breakfast” activity shall be excluded from this requirement.

~~004.02J~~ 003.10 An activity which requires more than three Trailblazer signs shall not qualify for a TODS panel.

~~004.02K~~ 003.11 Location of the Activity

~~004.02K1~~ 003.11A The activity or site may be located in a rural area or urban area.

~~004.02K2~~ 003.11B The activity or site must be located within five road miles of the highway, as measured from the gore of the intersection to the nearest point of intersection of the driveway of the qualified activity and the highway.

~~004.02K3~~ 003.11C An activity which is located more than five and less than 15 miles from a Rural Conventional Road may request a waiver from the Department in order to apply for space on a ~~tourist-oriented directional sign~~ TODS panel. The waiver may be given at the discretion of the Department where the business provides a tourist service different from those located within five miles of the intersection, where it is not located within five miles of another Rural Conventional Road and where no other directional signing is available for the activity.

~~004.02K4~~ 003.11D An activity located on property contiguous to a Rural Conventional Road shall be eligible for straight ahead signing on that Rural Conventional Road only at the intersection nearest to the business. The activity must be located within the distance required by Section ~~004.02K2~~ 003.11B.

~~004.02K5~~ 003.11E Signing for activities in the ahead direction shall be considered only when there is signing for a similar facility in either the right or left direction. The legend AHEAD in appropriate letter size may be used in lieu of directional arrows. The determination for ahead signing shall be made by the Department.

~~004.03~~ 004 TOURIST-ORIENTED DIRECTIONAL SIGN PANELS

~~004.03A~~ 004.01 Location

~~004.03A1~~ 004.01A The location of other official traffic control devices shall at all times take precedence over the location of ~~tourist-oriented directional sign~~ TODS panels ~~(TODS)~~. The signs may be located laterally outside the normal longitudinal alignment of other traffic control signs, but within the right-of-way.

~~004.03A2~~ 004.01B Not more than three TODS panels shall be installed on the approach at any intersection.

~~004.03A3~~ 004.01C One TODS panel shall accommodate all activity plaques for the left-turn direction and one TODS panel will accommodate all Activity plaques for the right-turn direction, except as noted in Section ~~004.03B2~~ 004.02B.

~~004.03A4~~ 004.01D One TODS panel for the straight ahead direction shall be allowed per direction of travel, as provided in Sections ~~004.02K4 and 004.02K5~~ 003.11D and 003.11E. When a TODS panel for the ahead direction is allowed, the TODS panel shall be located to the far right corner of the intersection and shall not obstruct the driver's view of other official traffic control devices.

~~004.03A5~~ 004.01E The exact location of ~~tourist-oriented directional sign~~ TODS panels shall be approved by the Department.

~~004.03A6~~ 004.01F Advance Signing ("1/2 Mile" or "Next Right or Left") may be installed in special circumstances. It shall be limited to those situations where sight distance, intersection vehicle maneuvers or other vehicle operating characteristics require advance notification of the activity to reduce vehicle conflicts and improve highway safety. The determination of whether advance signing will be allowed, shall be made by the Department. (Illustration 5 and 6)

~~004.03A7~~ 004.01G The intersection approach TODS panel shall be erected a minimum of 200 feet from the intersection except that the ahead sign, if used, shall be located to the far right corner of the intersection and shall not obstruct the view of traffic control devices.

~~004.03A8~~ 004.01H Advance Signing, when used, shall be located approximately 1/2 mile from the intersection with 800 feet between the TODS panels. In the direction of traffic, the order of Advance Signing shall be for facilities to the left, right and ahead.

~~004.03A9~~ 004.01I Spacing between each TODS panel shall be not less than 200 feet, or more than 500 feet. Spacing between a TODS panel and an official traffic control device shall be not less than 200 feet.

~~004.03B~~ 004.02 Order of Display

~~004.03B1~~ 004.02A In the direction of traffic when approaching an intersection where more than one TODS panel is located, the order of TODS panels shall be:

~~004.03B1a~~ 004.02A1 First, activities signed for the left-turn direction.

~~004.03B1b~~ 004.02A2 Second, activities signed for the right-turn direction.

~~004.03B1c~~ 004.02A3 Third, far right corner of the intersection, activities signed for the AHEAD DIRECTION.

~~004.03B2~~ 004.02B Where the total number of Activity plaques to both the right and left are four or less, they may be combined on one TODS panel. When approved Activity plaques are attached to one TODS panel, the order of the Activity plaques will be:

~~004.03B2a~~ 004.02B1 Top - activities signed for the left-turn direction.

~~004.03B2b~~ 004.02B2 Bottom - activities signed for the right-turn direction.

~~004.03B3~~ 004.02C To the extent consistent with other requirements of this section, Seasonal plaques shall occupy the bottom position in a multiple plaque installation. In the event a TODS panel installation

contains more than one Seasonal plaque, the plaque serving the business that has the shorter business season during the calendar year shall have the lower position. When a Seasonal plaque is removed or remounted the remaining plaques shall be repositioned to prevent gaps in the TODS panel.

~~004.03C~~ 004.03 TODS Panel Design

~~004.03C1~~ 004.03A TODS panels shall consist of one heading plaque with the legend TOURIST ACTIVITIES and from one to four Activity Plaques. The design shall conform to the requirements of the MUTCD and these Rules and Regulations. (Illustration 1 and 2)

~~004.03D~~ 004.04 TODS Material

~~004.03D1~~ 004.04A Heading plaques and Activity plaques shall be fabricated from extrusheet aluminum panels, of the width and length required, conforming to the Standard Specifications for Type B signs, and individually attached to the sign supports. Reflective sheeting with legend and any logo should be affixed directly to the individual extrusheet panels.

~~004.03D2~~ 004.04B Reflective sheeting shall be high quality Type III Reflective Sheeting and shall comply with ~~AASHTO~~ ASTM designation ~~M-268~~ D 4956-95. Type III sheeting shall be applied with mechanical equipment in accordance with manufacturers specifications.

~~004.03D3~~ 004.04C All aluminum shall be treated before applying the reflective sheeting according to the reflective sheeting manufacturers specifications.

~~004.03E~~ 004.05 Structural Supports

~~004.03E1~~ 004.05A TODS panels shall be mounted on wood or steel posts which conform to the ~~1985~~ latest edition of the ~~State of Nebraska Standard Specifications for Highway Construction, Section 1056.04 and 1083.02. Following approval of the 1996~~ Nebraska Department of Roads Standard Specifications for Highway Construction, Sections 1071.02 and 1075.06. ~~of that publication shall be applicable.~~ Wood posts shall be 4"x4" or 4"x6" as required. All 4"x6" wood posts shall be drilled to be breakaway as shown in Illustration 12. Steel posts for TODS panels shall be heavy weight, heavy mass, black posts and shall incorporate a breakaway design approved by the Federal Highway Administration.

~~004.03F~~ 004.06 TODS Panel and Trailblazer Locations

~~004.03F1~~ 004.06A Rural Areas - The edge of the signs shall be located a minimum of 15 feet from the travelled lane and five feet above the pavement edge. At intersections, signs located less than 100 feet from the cross road shall be mounted seven feet above the pavement edge.

~~004.03F2~~ 004.06B Urban Areas - Signs shall be set back at least six feet from the roadway edge where possible, except when conditions inhibit placement of this distance then the minimum distance shall be two feet. In curbed areas, the setback shall be measured from the back of curb. In non-curb sections, the edge of the signs shall be a minimum of six feet from the travelled lane. All signs in urban areas shall be mounted seven feet above the ground level or pavement edge whichever is higher.

~~004.03F3~~ 004.06C Tree Pruning - Trees or other herbaceous material which obscure TODS ~~sign~~ panel or Trailblazer sign message shall be pruned to the top elevation of such panel or sign for a distance of 200 feet in advance of such panel or sign. The jurisdiction having authority over the right of way in which the panel or sign is being placed shall be responsible for the pruning activities.

~~004.03F4~~ 004.06D Underground Utilities and Services - The activity and/or the agent shall fully acquaint themselves with the requirement pertaining to any moving or excavation of earth material, and they shall hold harmless the State of Nebraska or its entities. When moving and excavating earth material, the digger must call the Diggers Hotline of Nebraska at 1-800-331-5666.

~~004.04~~ 005 ACTIVITY PLAQUES

~~004.04A~~ 005.01 Each activity shall be limited to one Activity plaque for each direction of travel to that activity on the conventional road.

~~004.04B~~ 005.02 The content of the legend shall be limited to the identification of the activity, the distance to the activity, and the directional arrow. Legends shall not contain promotional advertising.

~~004.04C~~ 005.03 Times of operation may be included in the legend only if deemed to be necessary for the convenience of the motorist. This determination shall be made by the Department and shall be final. When times of operation are allowed, they must be incorporated into the two lines of legend.

~~004.04D~~ 005.04 Nationally approved symbols for services may be incorporated as alternates to word messages. Standard General Service symbols (Section 2H), and white Recreational and Cultural Interest Area symbols (Section 2D), as displayed in the MUTCD, may be used to indicate a general class of business.

~~004.04E~~ 005.05 Logos for specific businesses may also be used. The logo shall be reproduced in the colors and general shape consistent with customary use, and any integral legend shall be in proportionate size. No logos shall be permitted that resemble official traffic control devices in any manner.

~~004.04F~~ 005.06 When symbols or logos are used, they must be contained entirely within the border of the Activity plaque. If used with a word legend, the symbol or logo shall be placed to the left of the word legend. Activity plaques shall be designed and fabricated in accordance with specifications that will be made available to the applicant by the Department or Agent.

~~004.04G~~ 005.07 Design

~~004.04G1~~ 005.07A Sign sizes shall be as specified in the ~~Manual on Uniform Traffic Control Devices~~ MUTCD and these Rules and Regulations. All edges shall be smooth and free of burrs.

~~004.04G2~~ 005.07B The Activity plaques shall be rectangular in shape and have a blue background with a white legend and border. Each plaque shall be allowed a maximum of two lines of legend and may include one symbol if desired. The legend shall be white on a blue background.

~~004.04G3~~ 005.07C The size of the Activity plaques in rural areas shall be 72 inches wide, and 24 inches high. In urban areas, they shall not be less than 48 inches wide and 18 inches high nor more than 72 inches wide and 24 inches high. All physical dimensions shall be exact.

~~004.04G4~~ 005.07D The legend on Activity plaques on major highways in rural areas shall be in letters and numerals at least six inches in height, and in urban areas six inches in height, except that in urban areas they may be either six inches or four inches in height, depending on the Activity plaque size used in ~~004.04G3~~ 005.07C.

~~004.04G5~~ 005.07E Heading plaques and Activity plaques shall be fabricated from extrusheet aluminum panels, of the width and length required, conforming to the standard specifications for Type B Signs, and individually attached to the sign supports. Reflective sheeting with legend and any logo shall be affixed directly to the individual extrusheet panels.

~~004.05~~ 006 TOURIST-ORIENTED DIRECTIONAL TRAILBLAZER SIGNS

~~004.05A~~ 006.01 Trailblazer signs shall be required at all intersections where the direction of the route changes or where it might be questionable as to which highway to follow.

~~004.05B~~ 006.02 No TODS panel shall be erected until adequate Trailblazers, as determined by the Department, are in place off the State Highway System.

~~004.05C~~ 006.03 Order of Display

~~004.05C1~~ 006.03A Trailblazer signs shall be erected in the same order as ~~tourist-oriented directional signs~~ TODS panels.

~~004.05D~~ 006.04 Design

~~004.05D1~~ 006.04A Sign sizes, including the border, if any, shall be as specified in the MUTCD and these Rules and Regulations. The corners of the signs shall be trimmed to conform to the required radius as shown in Illustration 9. All edges shall be smooth and free of burrs.

Title ~~410~~ 411- NEBRASKA DEPARTMENT OF ROADS - ~~RIGHT OF WAY~~ TRAFFIC ENGINEERING DIVISION

Chapter ~~3~~ 5 - ~~Sign Permits~~ Tourist-Oriented Directional Sign (TODS) Panels (Continued)

~~004.05E~~ 006.05 Material

~~004.05E1~~ 006.05A Trailblazer signs shall be fabricated from a single sheet of minimum thickness 0.10 aluminum of alloys 6061-T6 or 5052-H38.

~~004.05F~~ 006.06 Structural Supports

~~004.05F1~~ 006.06A Trailblazer signs shall be mounted on wood or steel posts which conform to the requirements for Type "A" Signs as shown in Illustrations 11 and 12.

~~004.06~~ 007 COORDINATION OF SPECIFIC INFORMATIONAL AND BUSINESS (LOGO) SIGNS AND TOURIST-ORIENTED DIRECTIONAL SIGN (TODS) PANELS ~~(TODS)~~

~~004.06A~~ 007.01 If ~~tourist-oriented directional sign~~ TODS panels ~~(TODS)~~ and Specific Informational and Business (Logo) signs are to be installed at the same intersection, the Logo signs, presently existing or having the potential to exist within the ensuing two years, will have the higher priority for the first four sign placement positions emanating from the intersection, as defined in Title ~~410~~ 411, Chapter ~~3~~ 4, Section ~~003.03A~~ 004.01 of the approved Rules and Regulations.

~~004.06B~~ 007.02 ~~Tourist-oriented directional sign~~ TODS panels ~~(TODS)~~ will have the right to occupy the fifth and sixth sign placement positions, determined as defined in Section ~~003.03A~~ 004.01, cited above. However, if the Department and its Agent for the Logo program determine and agree, in writing, that any of the second through fourth positions can be relinquished, TODS panels may occupy these positions.

~~004.06C~~ 007.03 TODS panels and Logo signs shall not be intermingled or combined on the same sign structure.

~~004.07~~ 008 ADMINISTRATIVE

~~004.07A~~ 008.01 The Department or the Agent shall give one public notice of intent to erect ~~tourist-oriented directional sign~~ TODS panels at an intersection 30 days prior to accepting requests to place Activity plaques on the signs. Said notice of intent shall be published in a legal newspaper of the county or counties where the signs will be erected. Said notice shall specify from whom applications may be requested, and where or to whom said applications must be submitted for consideration.

~~004.07B~~ 008.02 Application

~~004.07B1~~ 008.02A Written requests for space on the ~~tourist-oriented directional sign~~ TODS panels shall be submitted to the Department or the Agent.

~~004.07B2~~ 008.02B All requests must be made by the owner or responsible operator of a qualified activity.

~~004.07B3~~ 008.02C A maximum of four Activity plaques each for the left-turn direction, right-turn direction and for the ahead direction will be available at any location.

~~004.07B4~~ 008.02D In the event that the requests to place Activity plaques on TODS panels exceeds the available space, the following criteria shall be used to determine the allocation of spaces on TODS panels:

~~004.07B4a~~ 008.02D1 In all instances, those activities nearest to the intersection will be given priority.

~~004.07B4b~~ 008.02D2 The first four applications received from qualified activities shall be selected to place their Activity plaque on the TODS panel if said applicants meet the criteria set forth in these regulations. The applications may be received by either the Agent or the Department headquarters in Lincoln, Nebraska, whichever is designated in the public notice required in Section ~~004.07~~ 008.

~~004.07B4c~~ 008.02D3 Once the maximum number of activities are posted on the TODS panels at an intersection, other similar type activities closer to the intersection shall have priority over the first applicant. The first applicant shall have the right to occupy his or her space for one year from the date of installation or rental period.

~~004.07C~~ 008.03 Audit

~~004.07C1~~ 008.03A At the request of the Department or Agent, the owner or responsible operator of an activity must provide any information and/or documentation available to the owner or responsible operator which demonstrates that the activity derives the major portion of its income or visitors during the normal business season from motorists not residing in the immediate area of the activity. The owner or responsible operator of the activity shall keep, maintain, and make such information and/or documentation available for inspection and audit at any time, following reasonable notice, after an application for a TODS panel has been submitted. The records may include, but are not limited to, guestbooks, attendance records, license plate numbers, tax receipts, and credit card receipts.

~~004.07D~~ 008.04 Maintenance

~~004.07D1~~ 008.04A The Department or Agent shall repair or replace within four weeks after damage occurs, any TODS panels that are destroyed or damaged by act of God or vehicle accident.

~~004.07D2~~ 008.04B The Agent shall be responsible for washing all TODS panels and Activity plaques on an annual basis or at any time the reflectorized facing becomes dull.

~~004.07D3~~ 008.04C The Agent shall be responsible for conducting an inspection annually on any breakaway mechanism for dirt or other obstruction that may interfere with the breakaway mechanism. All bolts shall be loosened and retorqued to proper specification.

~~004.07D4~~ 008.04D The Agent shall be responsible for the cost of the relocation of ~~tourist-oriented directional sign~~ TODS panels for highway improvements and shall complete the relocation within 60 days after notification that the sign must be removed.

~~004.07E~~ 008.05 Removal of Activity Plaques and Covering Seasonal Activity Plaques

~~004.07E1~~ 008.05A The owner of any Activity plaque must be notified by certified mail a minimum of 30 days in advance of the removal of ~~their~~ his or her plaque for any cause.

~~004.07E2~~ 008.05B Activity plaques may be covered or removed for any of the following:

~~004.07E2a~~ 008.05B1 Failure to pay rental fee.

~~004.07E2b~~ 008.05B2 Owning signs, leasing a sign, or leasing space on signs that are in conflict with the Nebraska Rules and Regulations for Title 410, Chapter 3, Section 002.

~~004.07E2c~~ 008.05B3 Failure to meet the minimum requirements as set forth in the state statutes, these regulations, and as provided under Section ~~004.02~~ 003.

~~004.07E2d~~ 008.05B4 Repeated delinquency as to any of the aforesaid violations.

~~004.07E3~~ 008.05C If an activity is closed due to fire, accident, remodeling or other emergencies for more than seven, but not more than 90 days, then the Agent shall have the Activity plaque covered to prevent inconveniencing the traveling public. The business shall not lose its priority or be required to reapply prior to the normal expiration of its contract. Extensions of time beyond 90 days may be granted in such case where insurance claims or financial arrangements require additional time. However, an owner who, due to his or her own negligence, fails to open within the 90-day period may lose his or her right to occupy the ~~tourist-oriented directional sign~~ TODS panel.

~~004.07E4~~ 008.05D The Agent shall be responsible for covering, or removing and subsequently reinstalling, the Activity plaque for activities operated on a seasonal basis within five working days of the activities closure. Where all of the activities on a ~~tourist-oriented directional sign~~ TODS panel are closed, the entire sign, including posts, shall be removed or the entire sign panel can be covered. In addition, all Trailblazer signs shall be removed or covered.

Title ~~410~~ 411- NEBRASKA DEPARTMENT OF ROADS - ~~RIGHT OF WAY~~ TRAFFIC ENGINEERING DIVISION

Chapter ~~3~~ 5 - ~~Sign Permits~~ Tourist-Oriented Directional Sign (TODS) Panels (Continued)

~~004.07E5~~ 008.05E Sign and panel covers shall be constructed of opaque and reasonably substantial material, bearing no advertising or readable message, and be fastened in such a manner that wind and normal weather conditions will not dislodge, tear, or permit fluttering of the covering. Lost, torn, vandalized, or unsightly coverings shall be replaced as soon as weather and road conditions permit.

~~004.07F~~ 008.06 Fees for ~~Tourist-Oriented Directional Sign~~ TODS Panels

~~004.07F1~~ 008.06A The fee for placing Activity plaques on ~~tourist-oriented directional sign~~ TODS panels shall include, but not be limited to: the fair market rental value of the sign site; fabrication, erection, maintenance or servicing of ~~tourist-oriented directional sign~~ TODS panels and Activity plaques; removal or covering Activity plaques; other costs associated with the program, and when applicable, reasonable profit for the Agent operating the program. An additional fee shall be charged for required Trailblazer signs. The fee for each space on the ~~specific informational sign~~ TODS panel shall be the same to all activities, except seasonal activities. The annual fee paid by the seasonal activity may be reduced by the ratio that the number of full or partial months that the facility is closed to the public usage bears to the number of months in a year, but the resulting fee shall be not less than 50% of the annual fee. The lease agreement shall be for a term of not less than one year, nor more than five years. It shall specify the cost of Trailblazer signs and the covering of Seasonal plaques and other information that is necessary.

~~004.07G~~ 008.07 Oversight of the Agent by the Department

~~004.07G1~~ 008.07A The Department shall review all proposed locations for ~~tourist-oriented directional signs~~ TODS panels to determine if there is a conflict with existing signs or future sign installations. The Department may make spot checks of the leases with the applicant, check activities for compliance with state statutes and these regulations, and make such audits as may be necessary.

ANNOTATION

Title ~~410~~ 411	**Enabling Legislation**
Chapter ~~3~~ 5	**39-207 through 39-211**
~~Section 004~~	**Neb. Rev. Stat.**

Illustration 1

RURAL TODS PANEL
(4 PANEL COMBINATION)

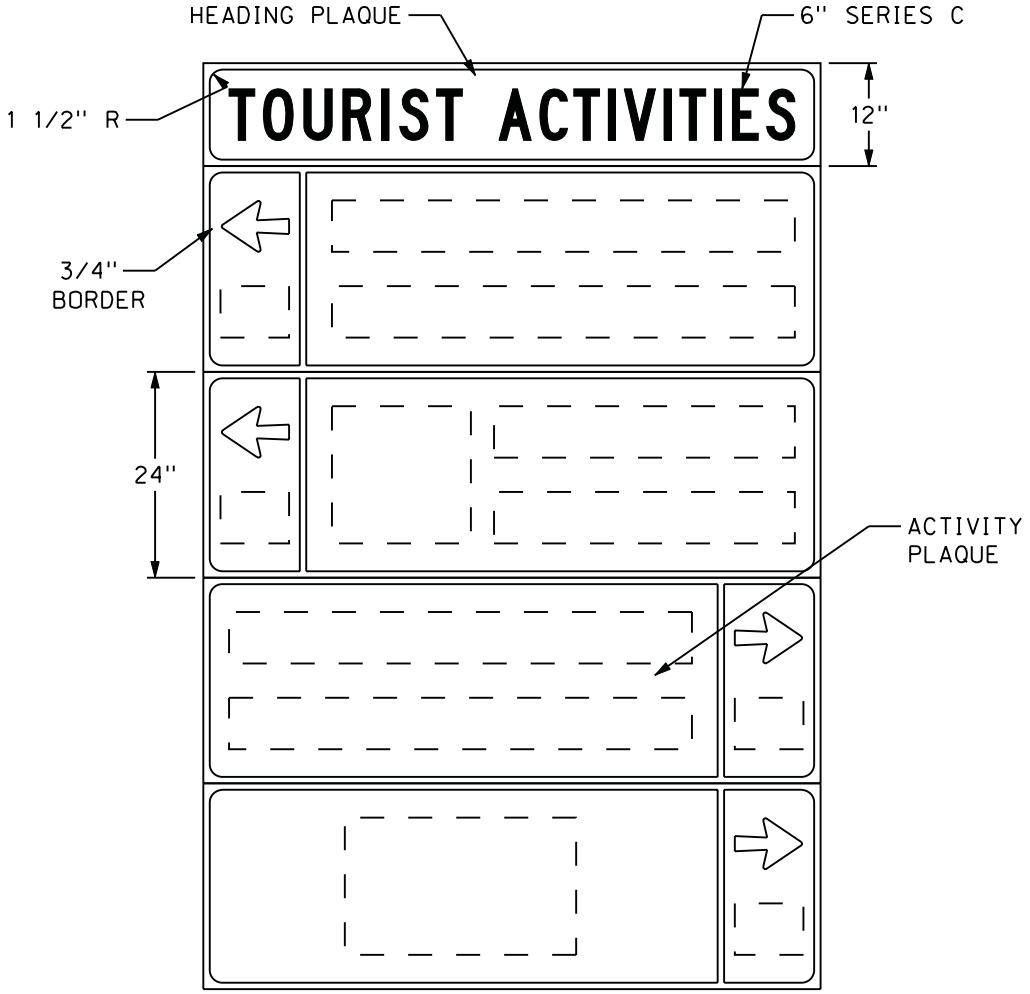

Illustration 2

URBAN TODS PANEL
(4 PANEL COMBINATION)

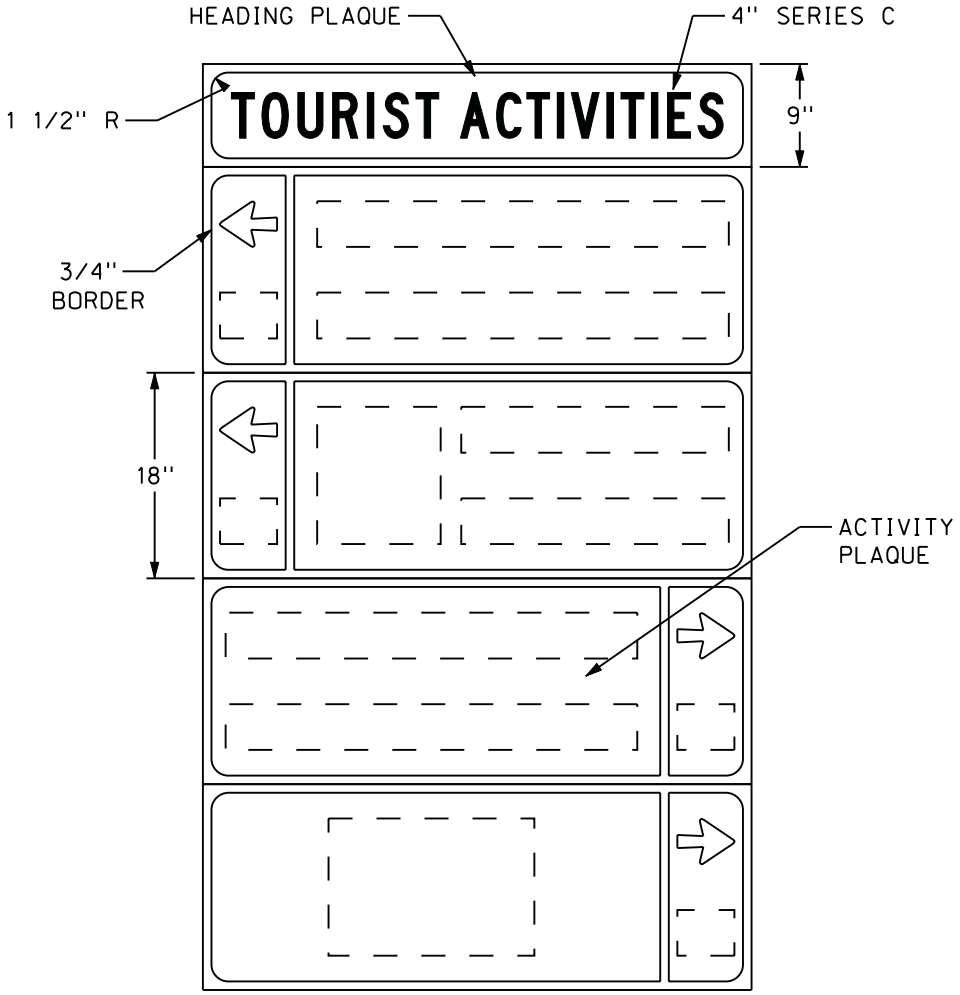

Illustration 3

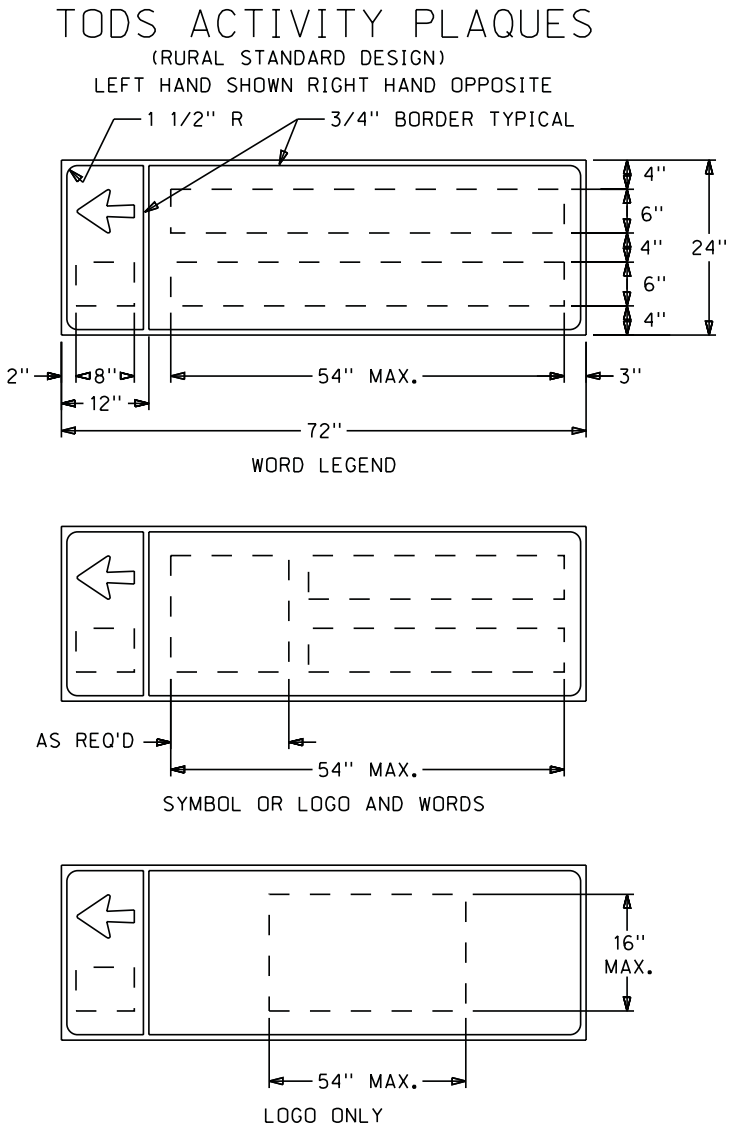

Illustration 4

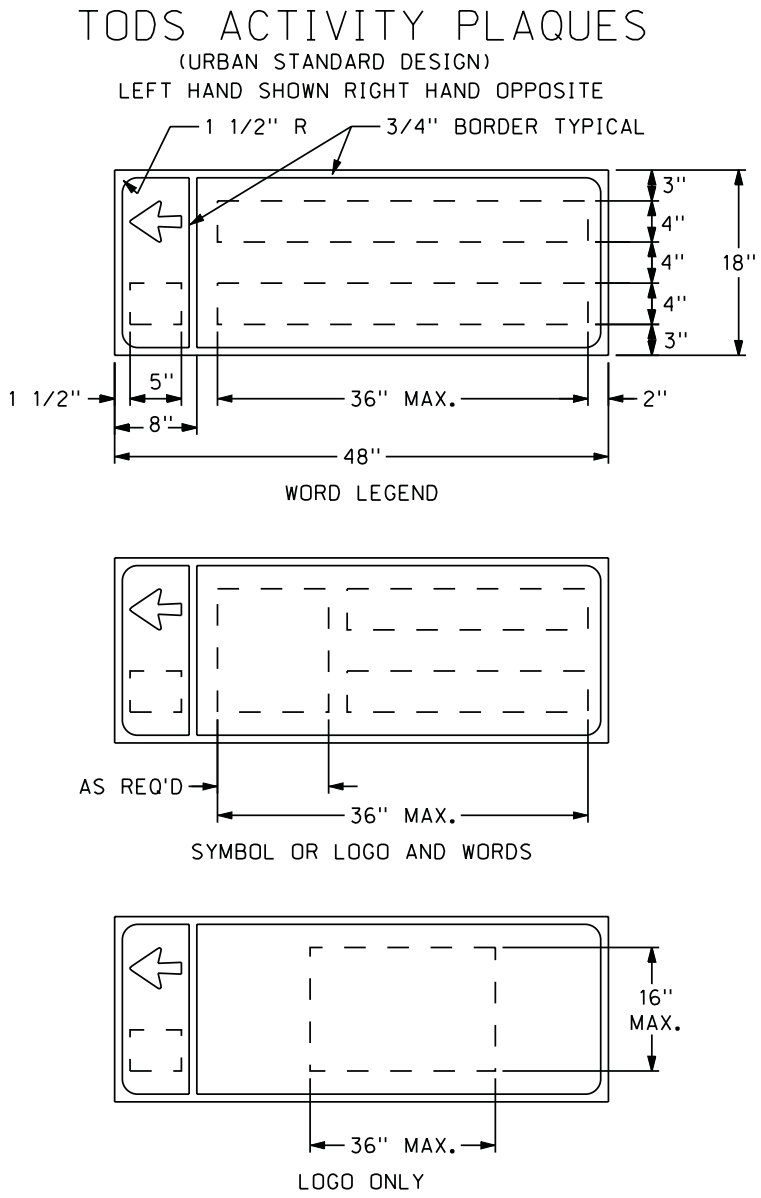

Illustration 5

TODS ADVANCE PANEL

RURAL (SPECIAL CIRCUMSTANCES ONLY)

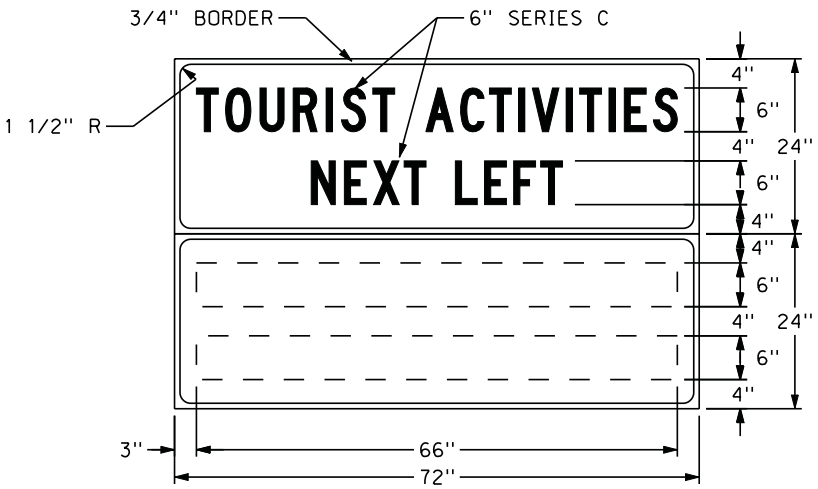

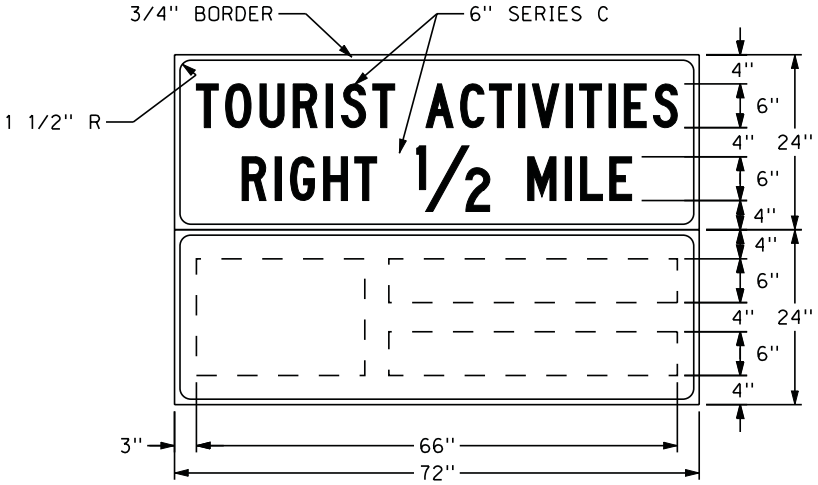

USE FOR INTERVENING ROAD

Illustration 6

TODS ADVANCE PANEL

URBAN (SPECIAL CIRCUMSTANCES ONLY)

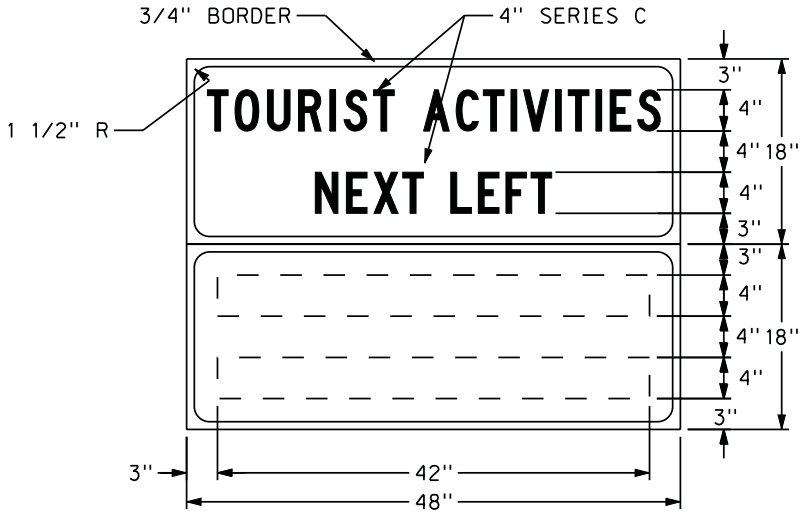

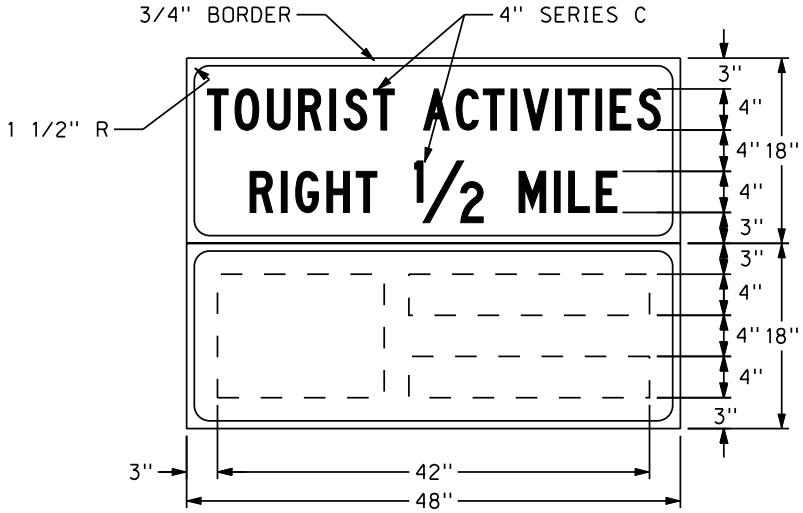

USE FOR INTERVENING ROAD

Illustration 7

TODS SIGNS

(EXAMPLES)

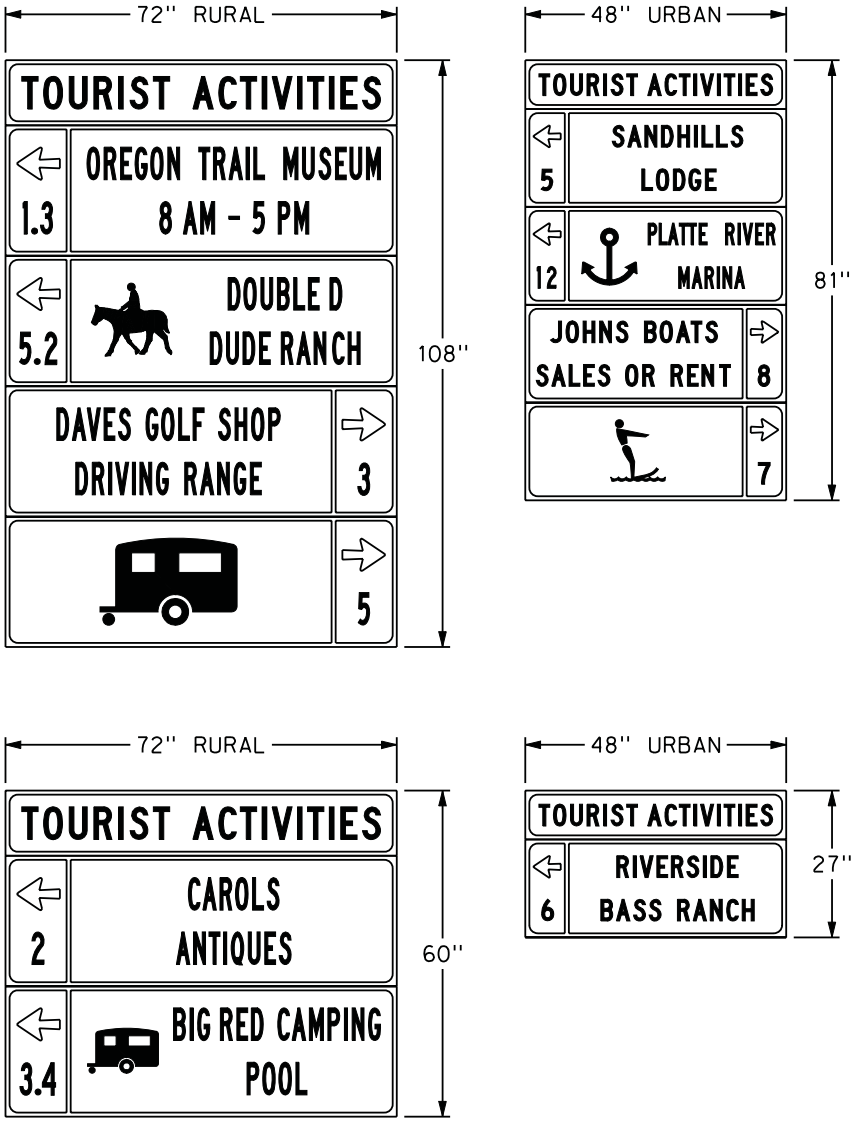

Illustration 8
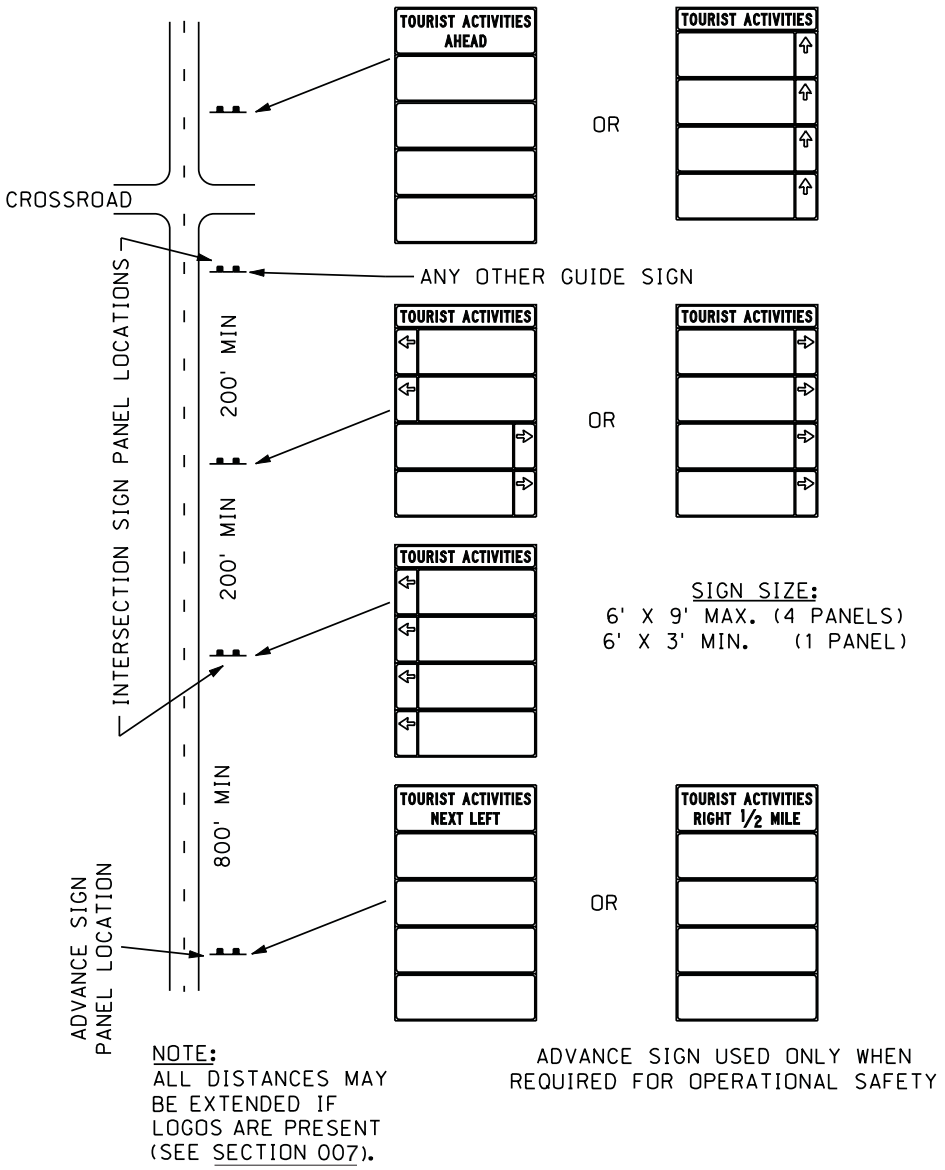
TODS PANEL RURAL LOCATION